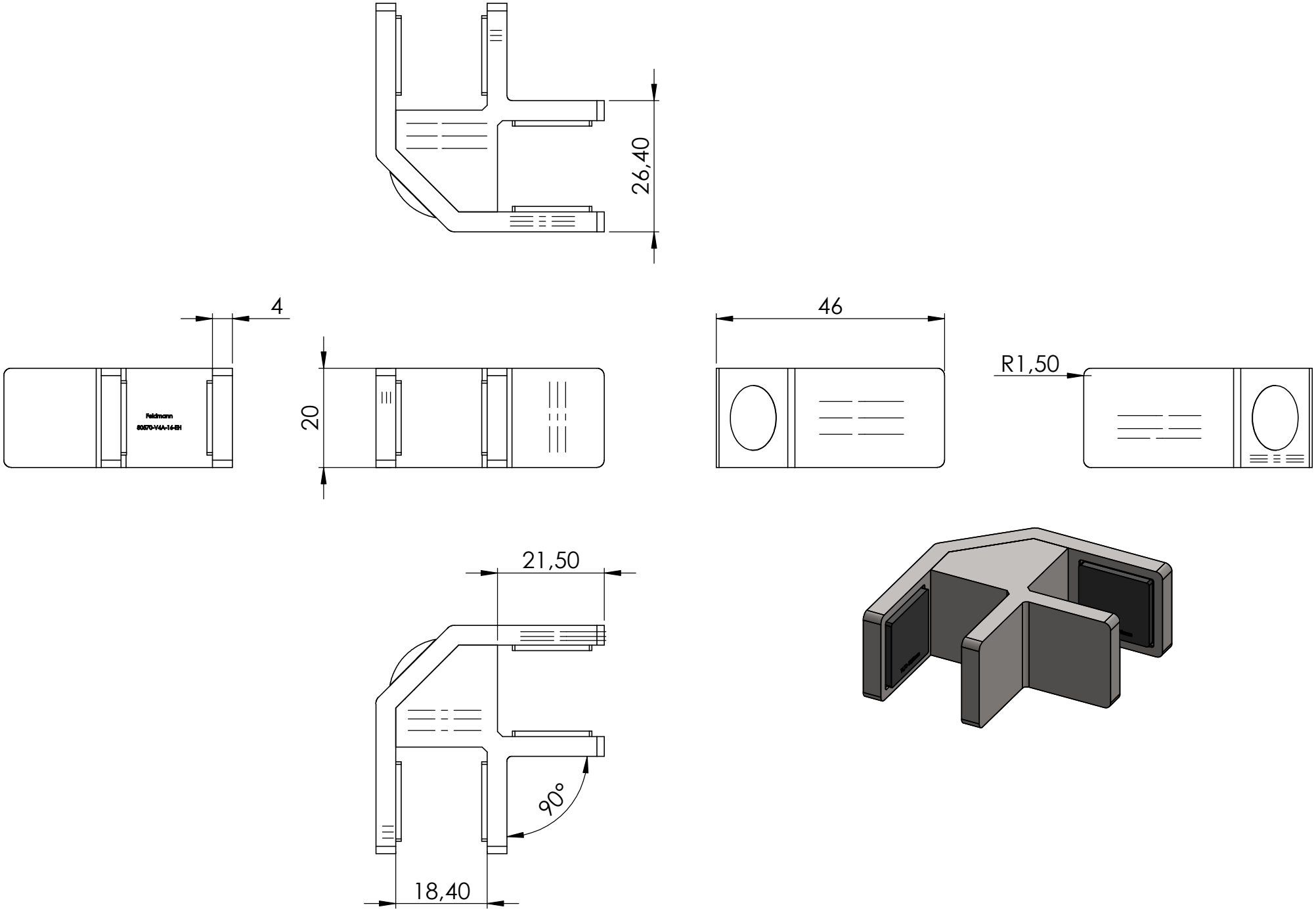
26,40
4
Feldmann
80570-V4A-14-EH
20
46
R1,50
21,50
90°
18,40

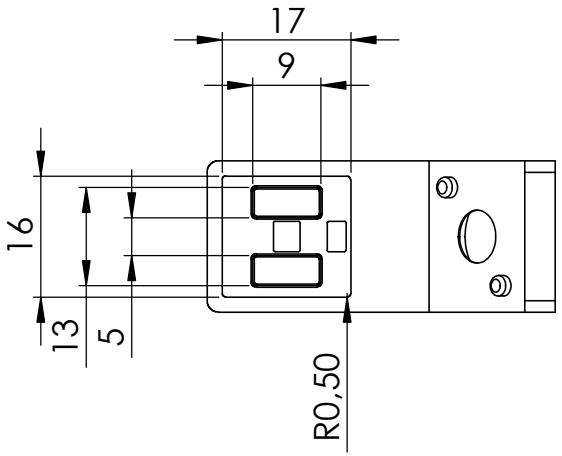
17
9
16
13
5
R0,50

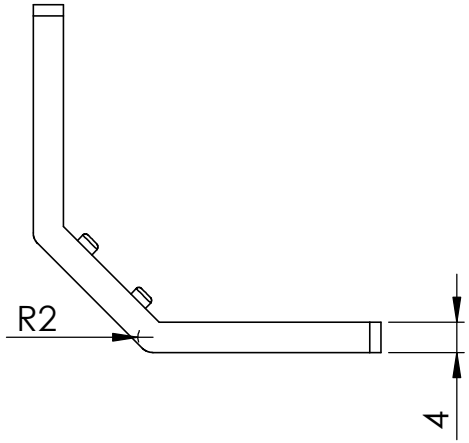
R2
4

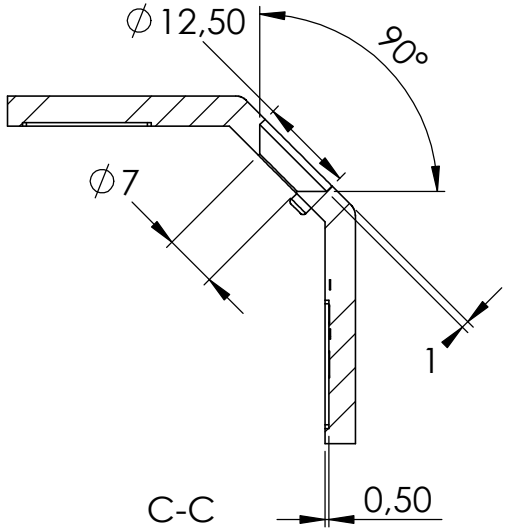
∅12,50
90°
∅7
1
C-C
0,50

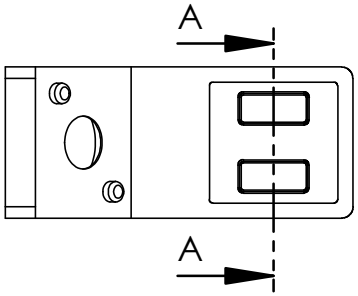
A
A

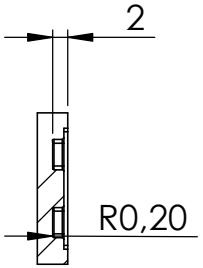
2
R0,20
A-A

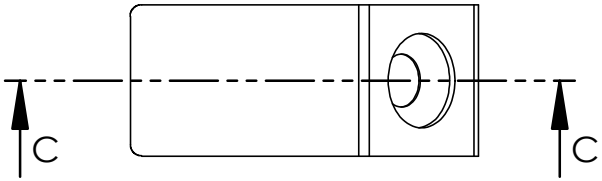
C
C

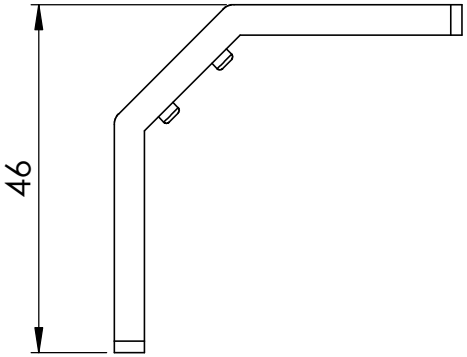
46

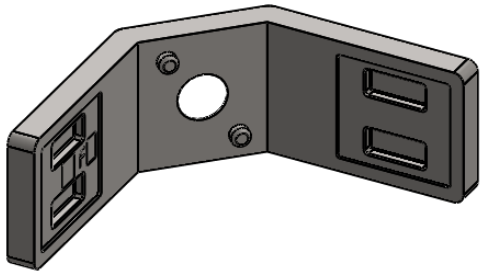

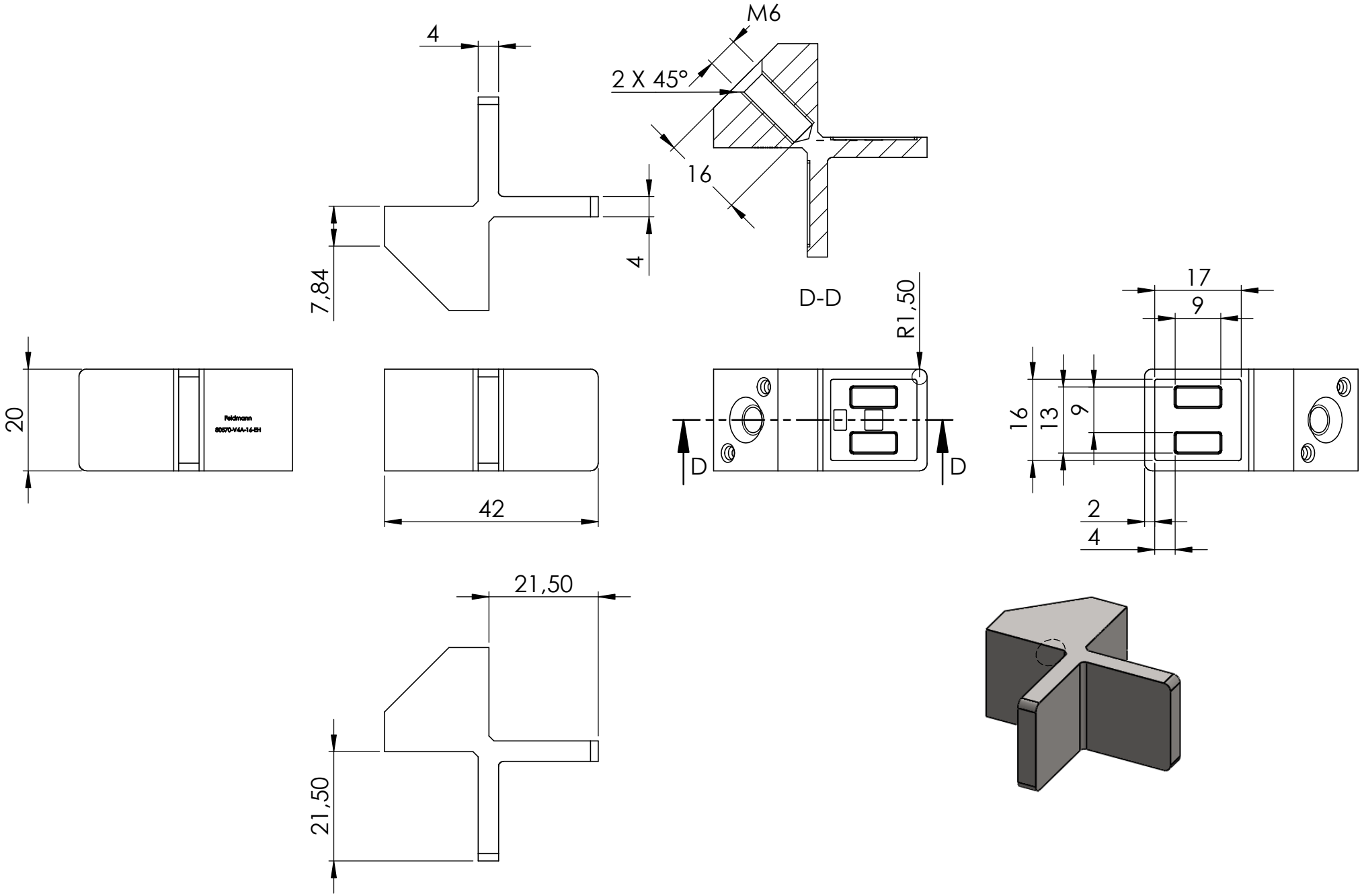
4
M6
2 X 45°
16
7,84
4
D-D
R1,50
17
9
20
Feldmann
60570-V4A-14-EH
16
13
9
D
D
42
2
4
21,50
21,50

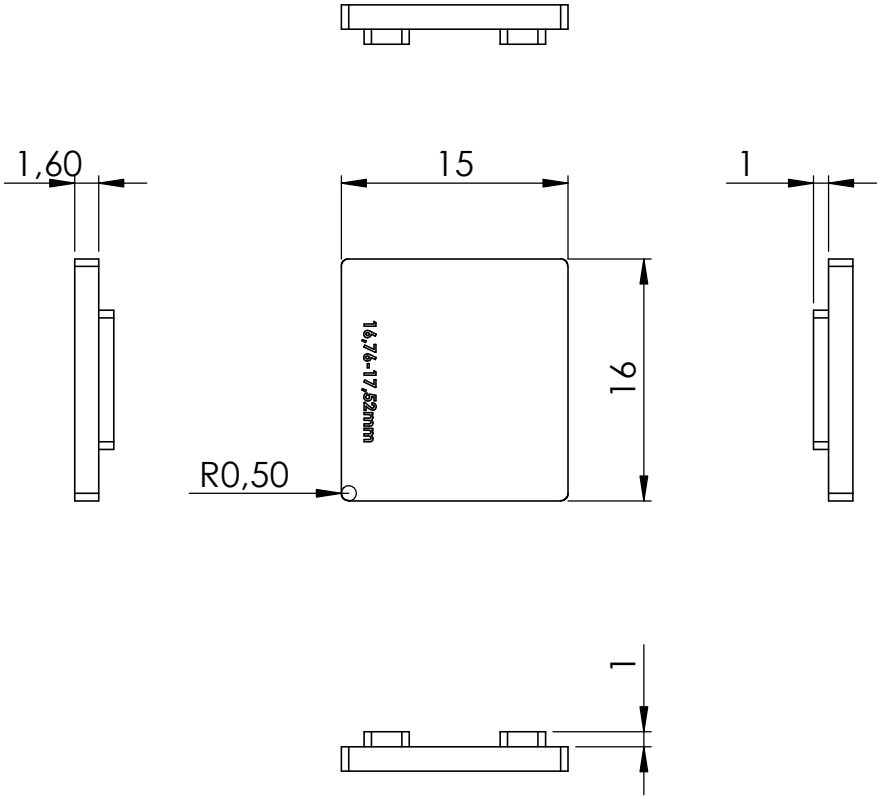
1,60
15
1
16,76-17,52mm
16
R0,50
1

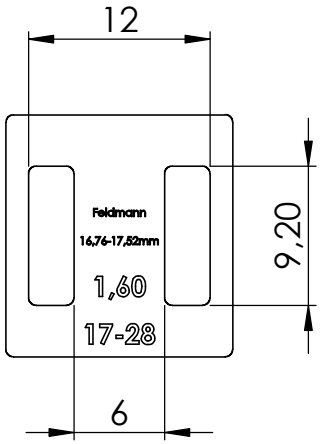
12
Feldmann
16,76-17,52mm
1,60
17-28
9,20
6

16,76-17,52mm
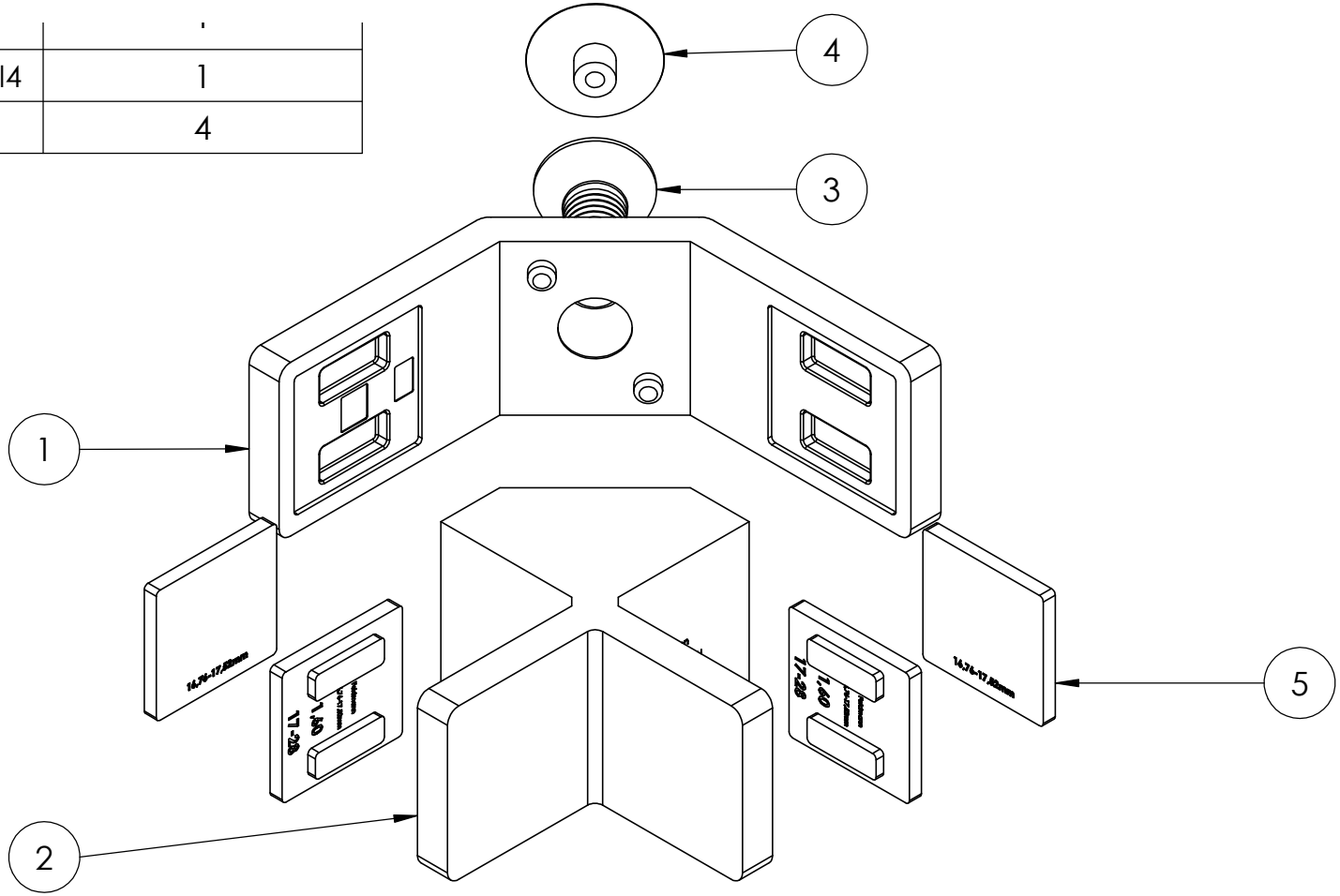
3	16S	1
4	80570-xxx-xx-EH Teil4	1
5	16,76-17,52mm	4