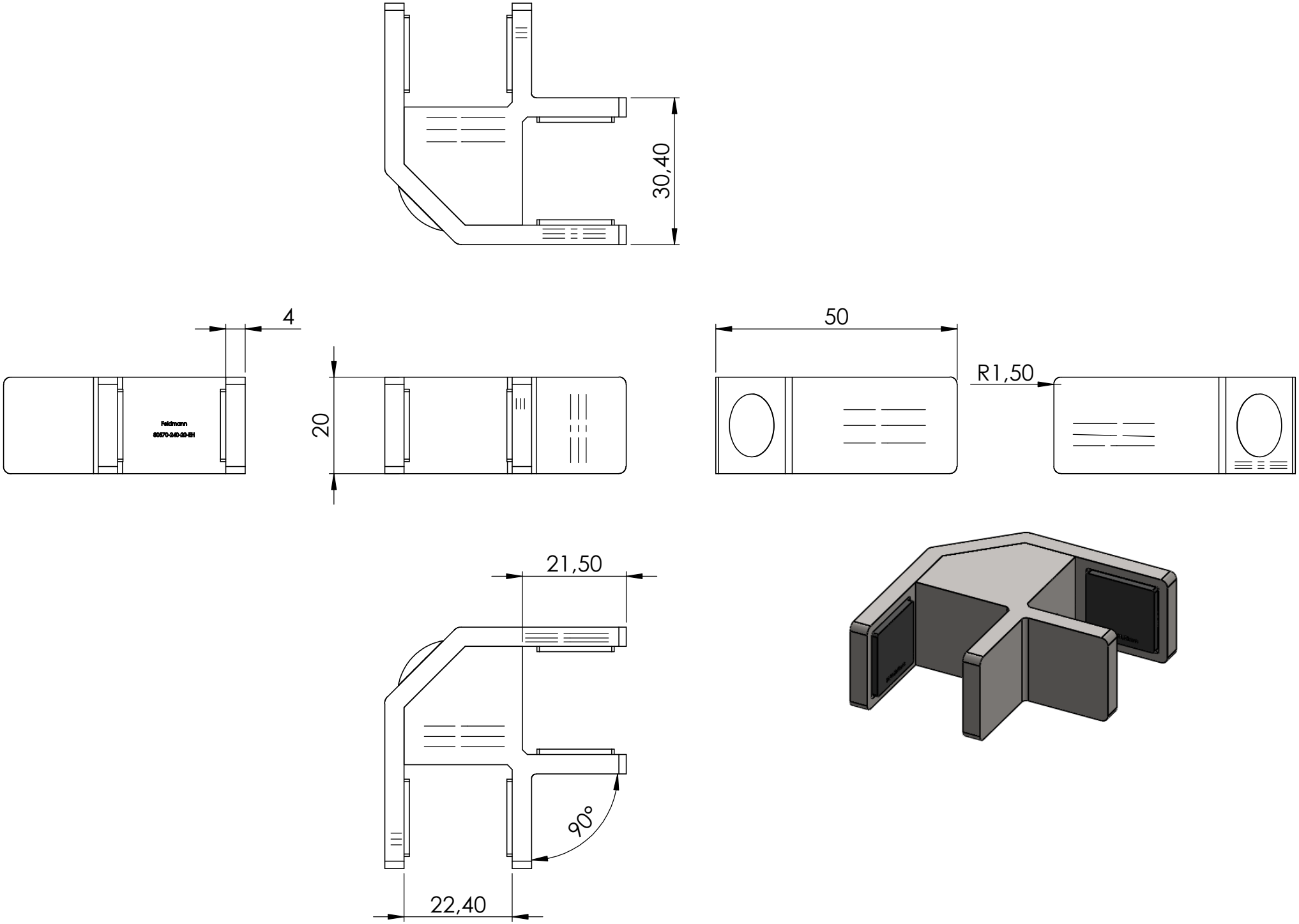
30,40
4
Feldmann
50570-240-20-EH
20
50
R1,50
21,50
90°
22,40

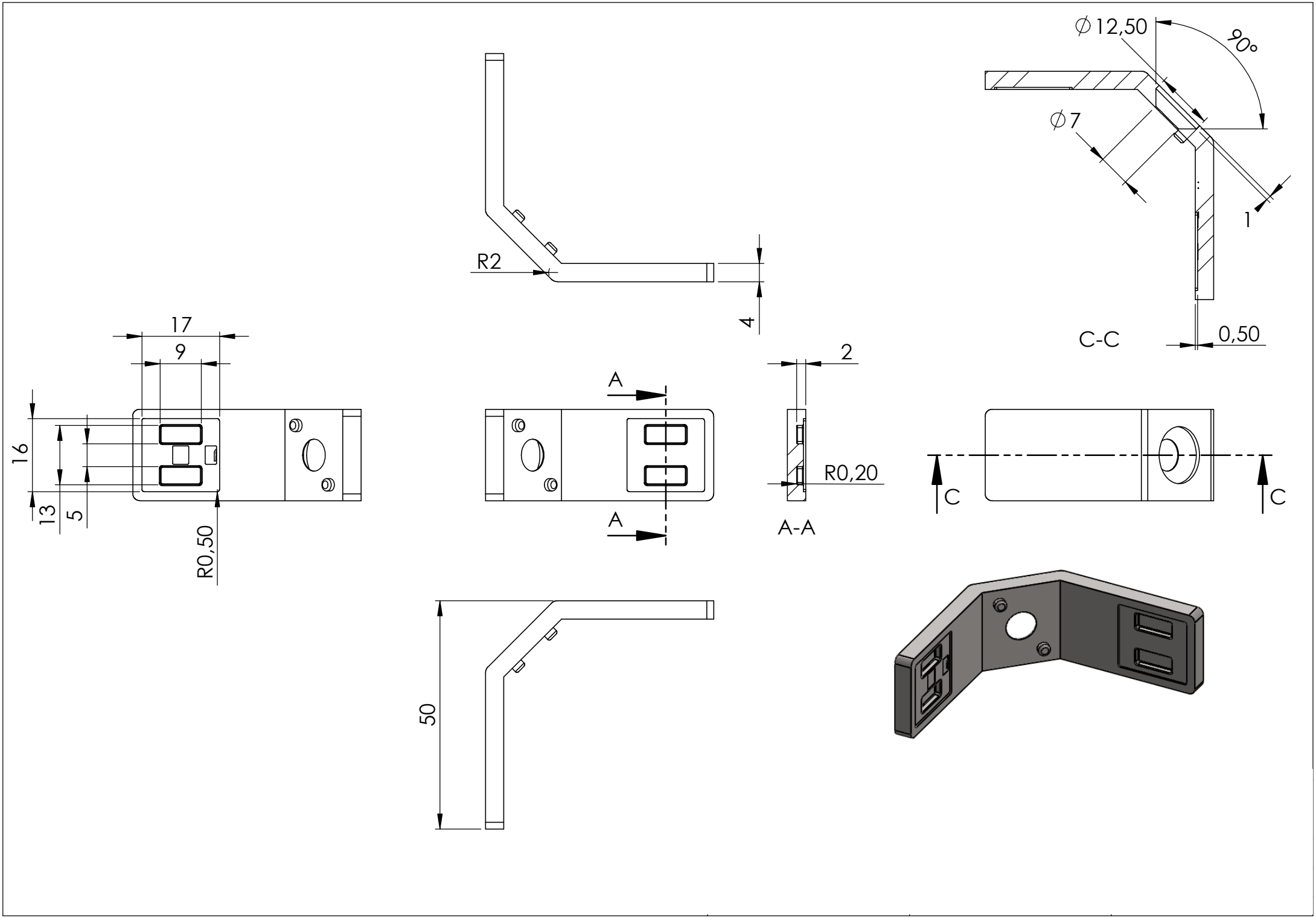
∅12,50
90°
∅7
1
C-C
0,50
R2
4
17
9
16
13
5
R0,50
A
A
2
R0,20
A-A
C
C
50

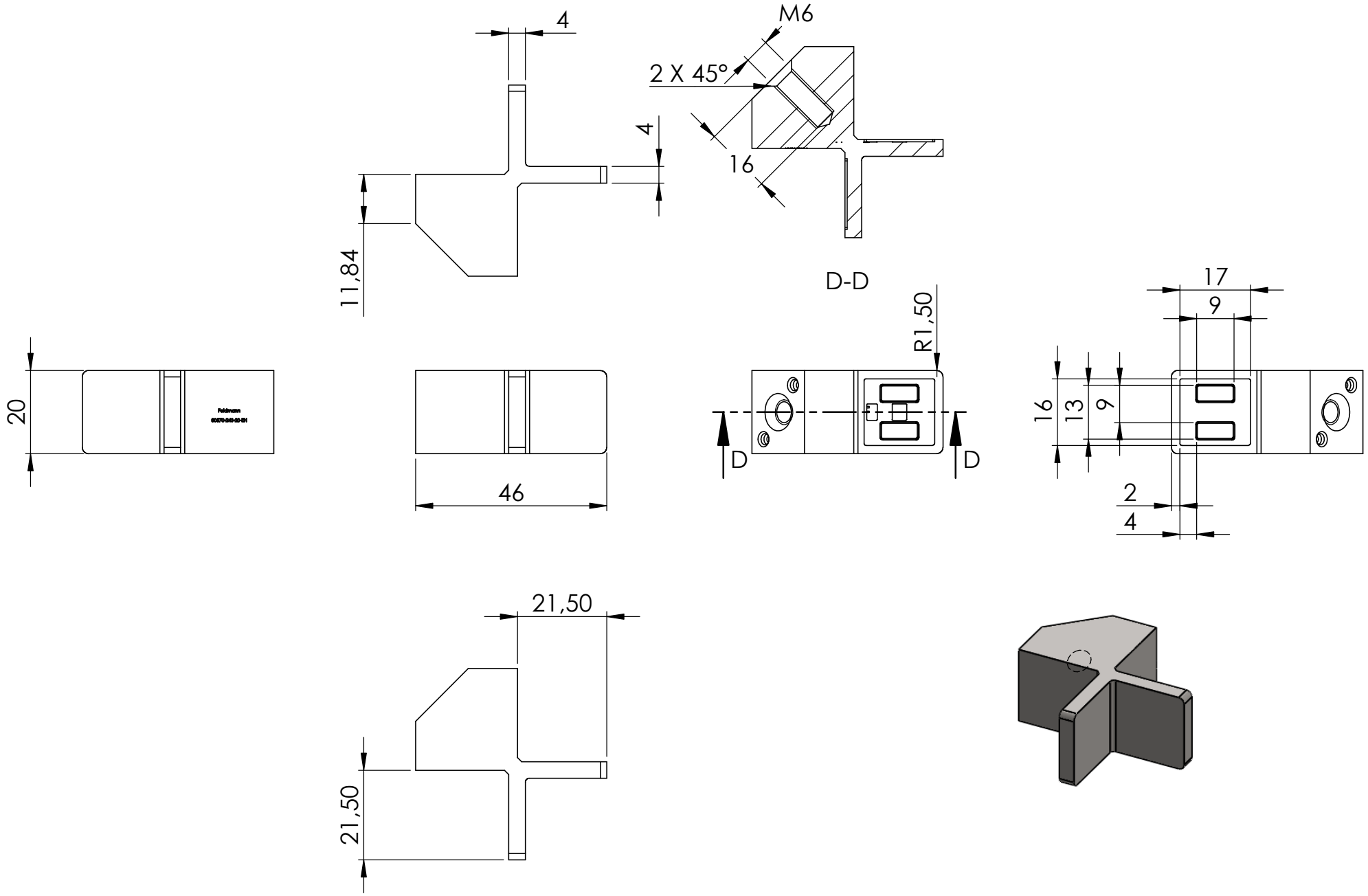
4
M6
2 X 45°
4
16
11,84
D-D
R1,50
17
9
20
16
13
9
D
D
46
2
4
21,50
21,50

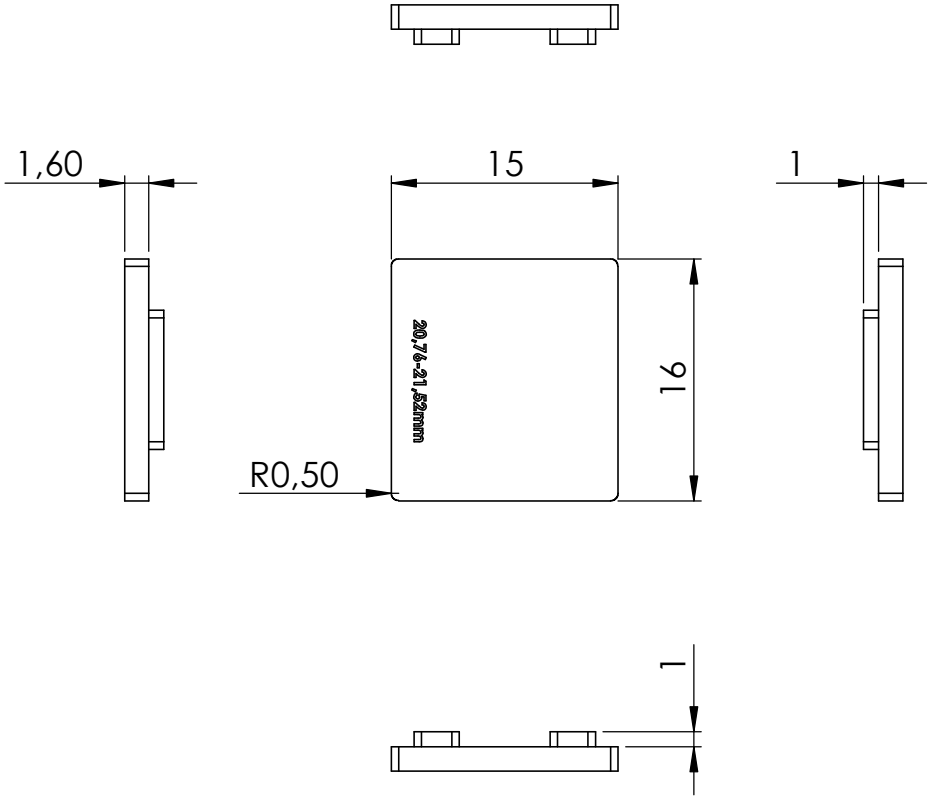
1,60
15
1
20,76-21,52mm
16
R0,50
1

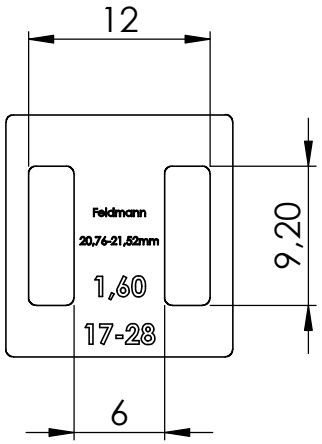
12
Feldmann
20,76-21,52mm
1,60
17-28
9,20
6

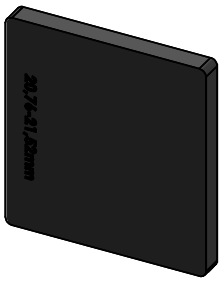
20,76-21,52mm
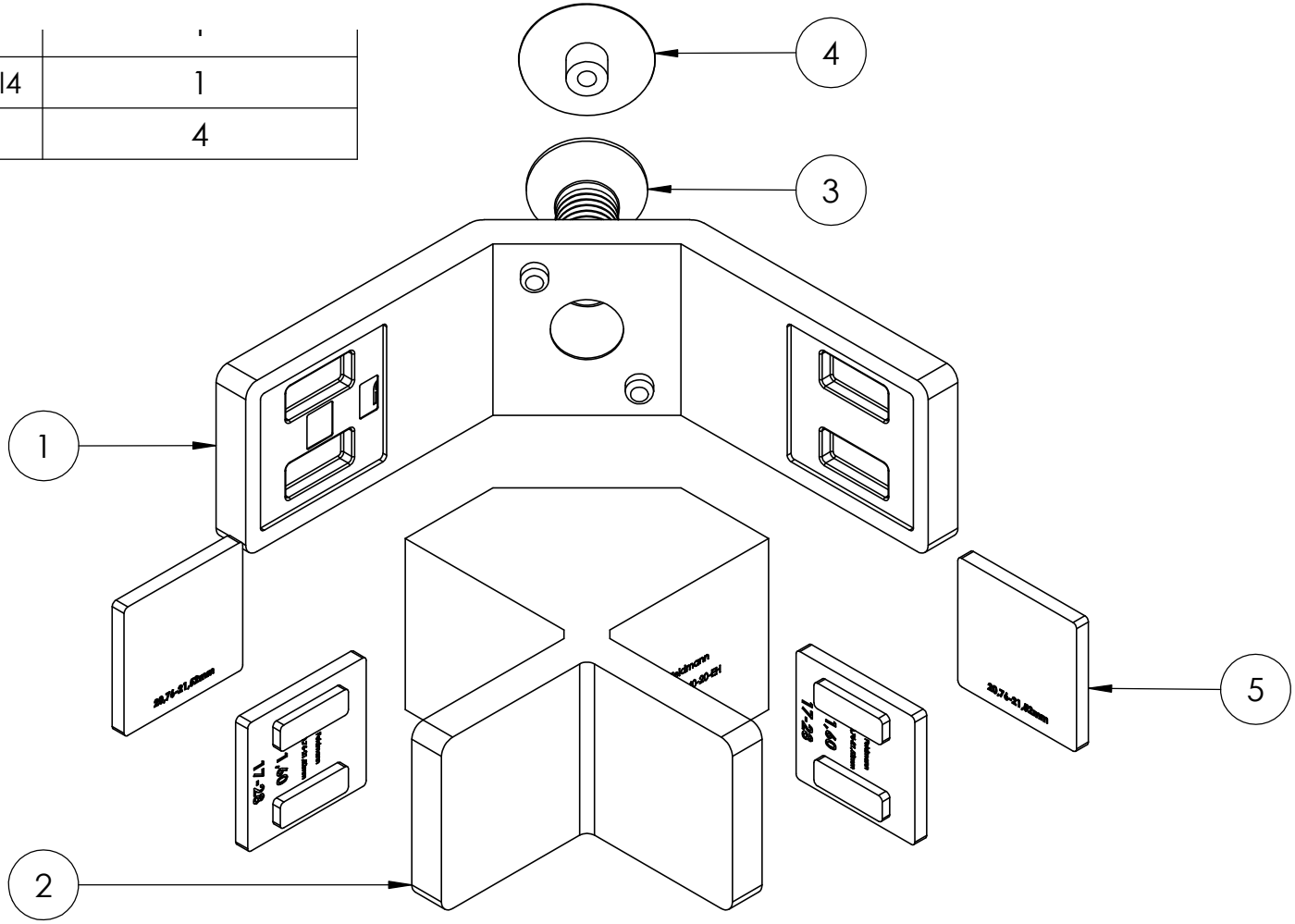
3	16S	1
4	80570-xxx-xx-EH Teil4	1
5	20,76-21,52mm	4